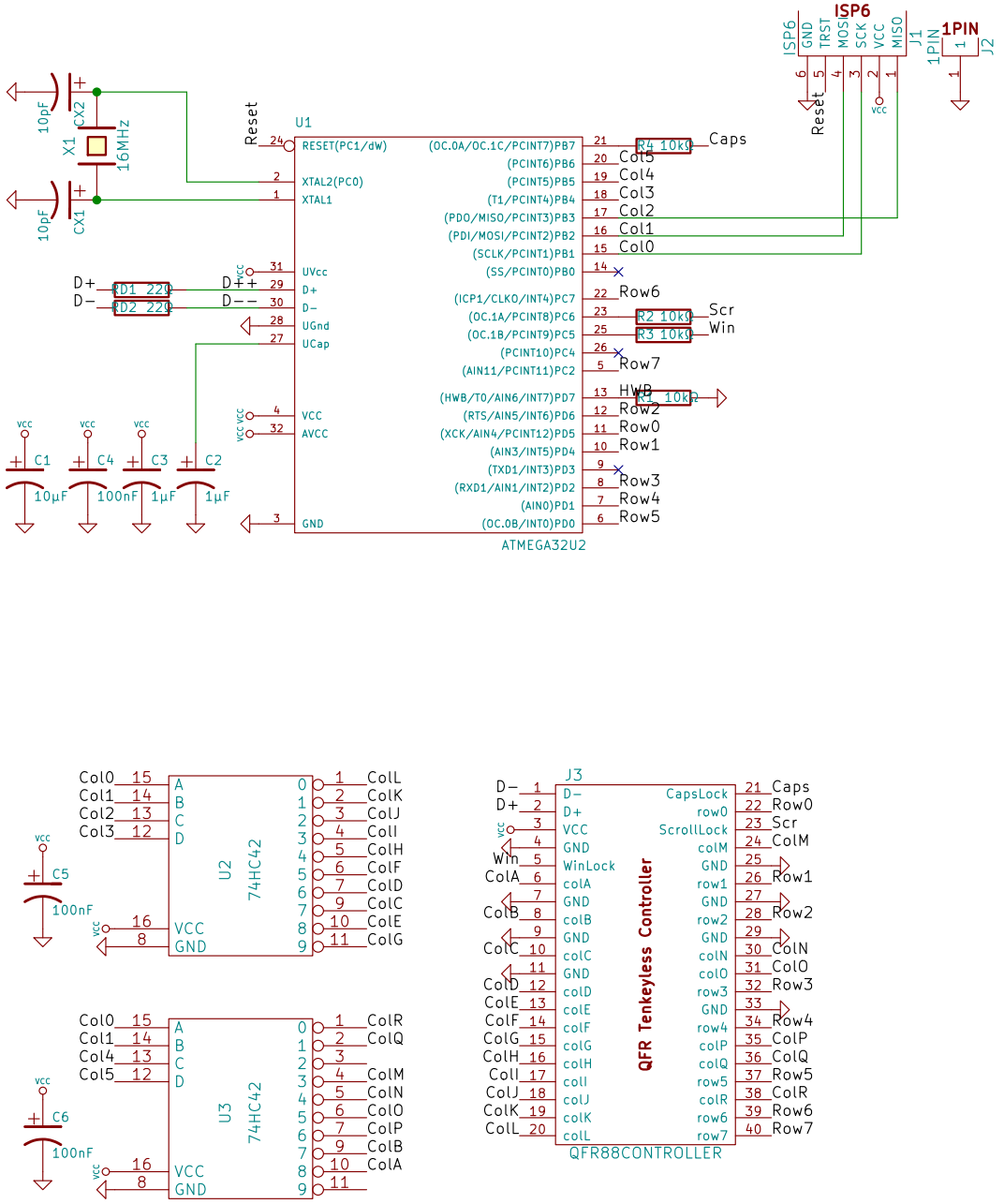

8×18 Switch matrix controller

©2012 Fredrik Atmer

Bathroom Epiphanies

Sheet: /

File: frosty_flake.sch

Title: Frosty Flake

Size: A4	Date: 2013-06-02	**Rev: 2013-06-02**
KiCad E.D.A. eeschema (2013-07-09 BZR 4241)-testing		Id: 1/1